● Ball screw specifications

Shaft diameter (mm) - Lead (mm)	15 - 5	
Number of circuits / Thread direction	2.5 turns 1 circuit / Right-hand	
Ball diameter (mm)	3.175	
Root diameter (mm)	12.5	
Series	GW	GY
Basic dynamic load rating C (N)	5100	
Basic static load rating C0 (N)	10500	
Accuracy grade / Axial clearance symbol	C7 / Y	C10 / Y
Axial clearance (mm)	0.030 or less	0.100 or less
Preload torque (N·cm)	----	
Recirculation system	Tube method	
Wiper	Lip seal	
Lubricant	Alvania Grease S2	
Phosphate coating	Nut alone	Screw shaft, nut

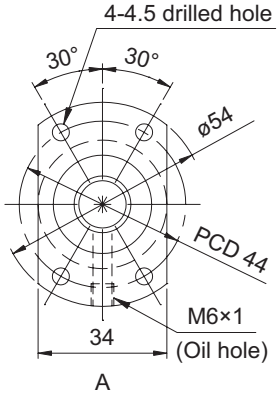

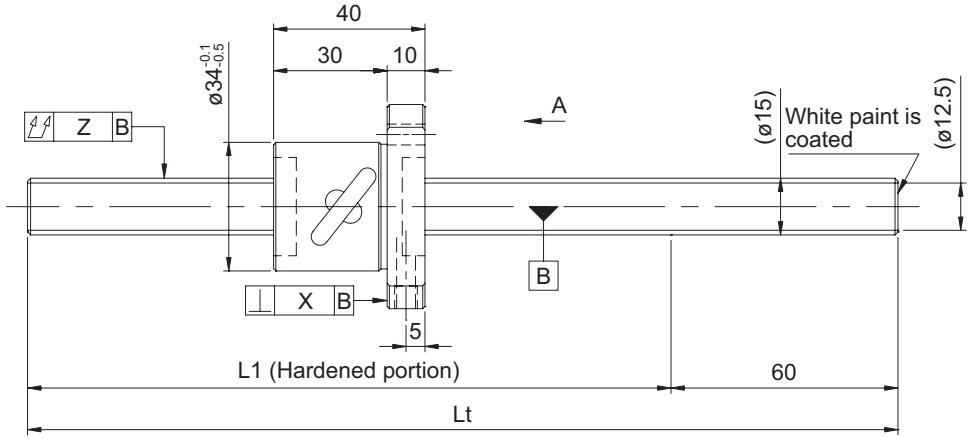

Model No. (Unfinished shaft ends)	L1	Lt	Maximum stroke (L1 - nut length)
GW1505DS-HULR-0600A	540	600	500
GW1505DS-HULR-1200A	1140	1200	1100
GY1505DS-HULR-0600A	540	600	500
GY1505DS-HULR-1200A	1140	1200	1100

• At the time of delivery, grease is inserted inside of the nut, with rust-preventive oil also applied. Before and during use, apply lubricant where appropriate.

● Shaft end finish type

Standard rolled ball screws are available with KURODA's recommended shaft end finish types for each size.

Other than KURODA's recommended shaft end finish types described below, additional machining including keyways, tapped holes, and D-cut processing are also available if requested. Please contact KURODA with your orders. Model examples for finished shaft ends are described below.

Model example: Unfinished shaft ends (See left figure) → Finished shaft ends

GY1505DS-HULR-1200A → GY1505DS-HULR-1195X1128-CAY

└→Thread length

└→Overall screw shaft length

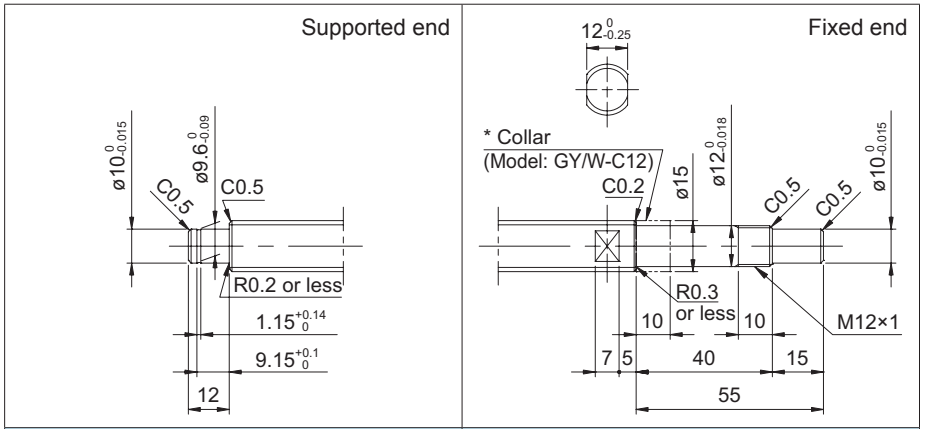

Applicable supported end support unit	Applicable fixed end support unit
BUK-10S (Square type)	BUK-12, BUK-12F (Square type)
BUM-10S (Round type)	BUM-12, BUM-12F (Round type)

● Optional specifications

• Ball screw lubricating unit LUBSEAL can be equipped.

Model example: GY1505DS-HUSR-1195X1128-CAY

└→Wiper material S: LUBSEAL

• Anticorrosive black coating (coating thickness: 1 to 2 μm) is available.

Lead accuracy	Accuracy of each part		Mass (kg)
Cumulative lead error	X	Z	
0.05/300	0.025	0.070	1.08
		0.170	1.91
0.21/300	---	0.140	1.08
		0.400	1.91